CYBERBED

THREE STYLES - ALL DRAWINGS

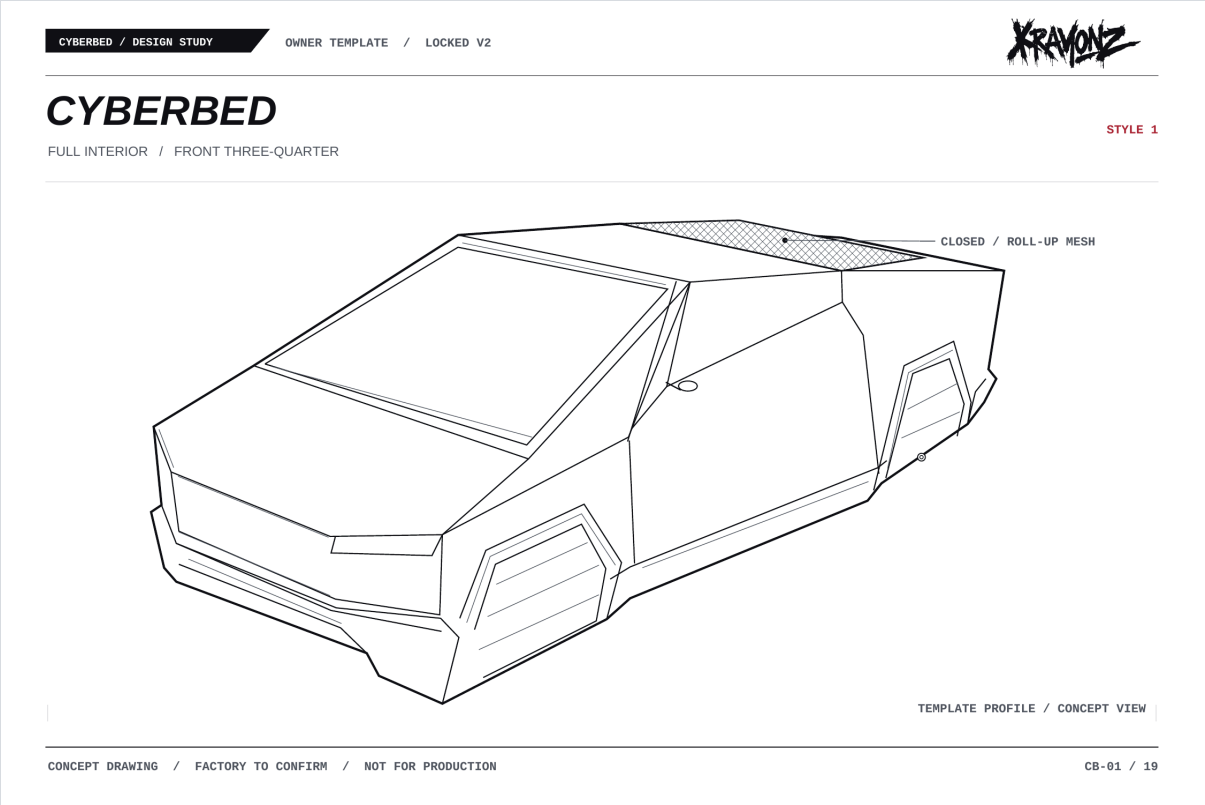

Style 1 - Full Interior, front three-quarter. The roll-up mesh hatch sits closed over the roof opening.

The inflatable Cybertruck bed, three ways - drawn, not rendered. One shell, three configurations: for each style, the dimensioned drawing, the exploded view of the same eight flat-pattern pieces, a three-quarter drawing, and the interior drawings. Every view carries the same Cybertruck wedge - one straight line up to a single peak, one straight slope down to the tail - and the same bubble side mirror on the cab flank. Entry is through the roof: a mesh hatch panel rolls up to open, and doubles as the ventilation while the bed is occupied.

Two sizes throughout: Kids - the same truck at honest scale, 83 in overall with a 68 x 49 in deck - and Adult Full, 92 in overall with a 75 x 54 in sleeping deck, a true full-size sleeping area that sleeps two full-size adults. Adult figures are design targets - factory to confirm.

Prepared for Frankie · November 2026 · krayonz.ink

THE THREE STYLES

Pick the layout - every style comes in both sizes

One shell, eight pieces, three configurations. Every style sleeps on the same full-length deck inside the same enclosed shell - what changes is the interior: trim emphasis in Style 2, two zones in Style 3. The wedge, the peak, the wheels and the mirror never move.

STYLE 1 - FULL INTERIOR

The mattress runs the whole inside, front to back - from the steering wheel to the tail light. Maximum sleep space: one clean open room inside the truck, pillow at the cab end.

Mattress: Deck: 68 x 49 in Kids · 75 x 54 in Adult Full

STYLE 2 - TRUCK-BED ONLY

Same shell, same full-length deck as Style 1 - the difference is the interior trim: pockets and finish are emphasized in the rear zone, lounge-style, while the bed still runs the full length of the truck.

Mattress: Deck: 68 x 49 in Kids · 75 x 54 in Adult Full - identical to Style 1

STYLE 3 - SPLIT CONVERTIBLE

Two sleeping zones on the same full-length footprint, split by a low inflated divider - two sleepers, or bed + lounge. The zones together run the deck's full length; the roof hatch serves both.

Mattress: Two zones, combined deck 68 x 49 in Kids · 75 x 54 in Adult Full

Adult Full figures are design targets - the factory confirms final proportions at the quote stage (see Sizes page).

STYLE 1 - FULL INTERIOR

Dimensioned Drawing - Side + Top View

Side elevation and top plan of the same shell. Adult design targets: length 92, peak height 40 at 40% of length, deck 75 x 54 - factory to confirm. Width is never dimensioned; the factory sets it to hold the deck.

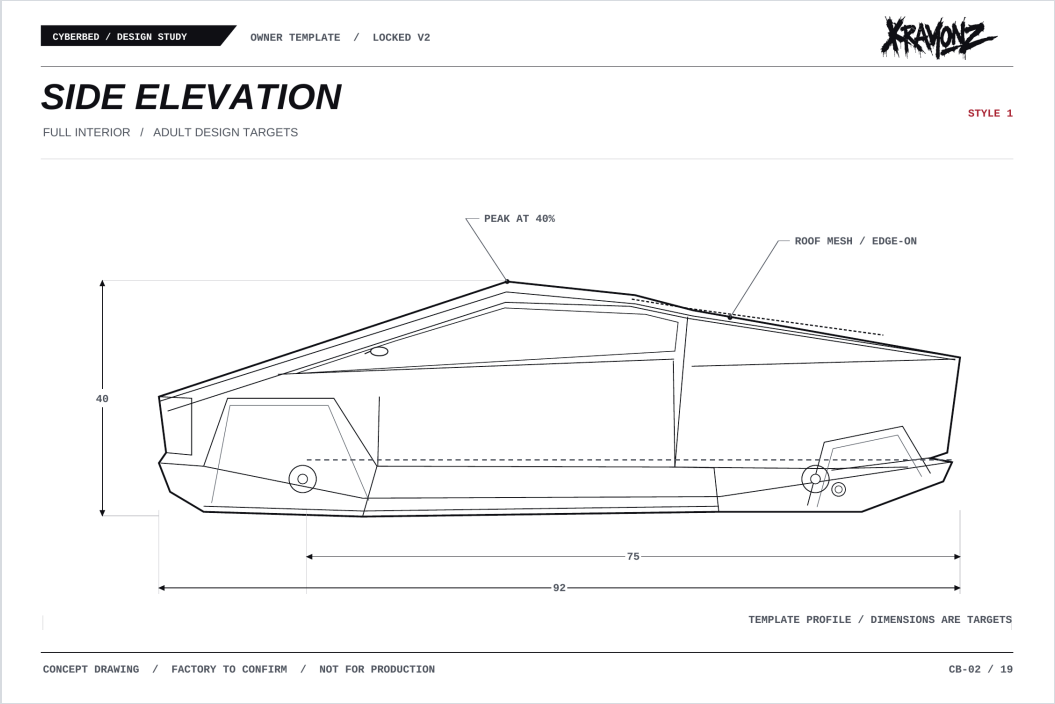

Side elevation - dimensioned. The roof mesh reads edge-on along the rear slope.

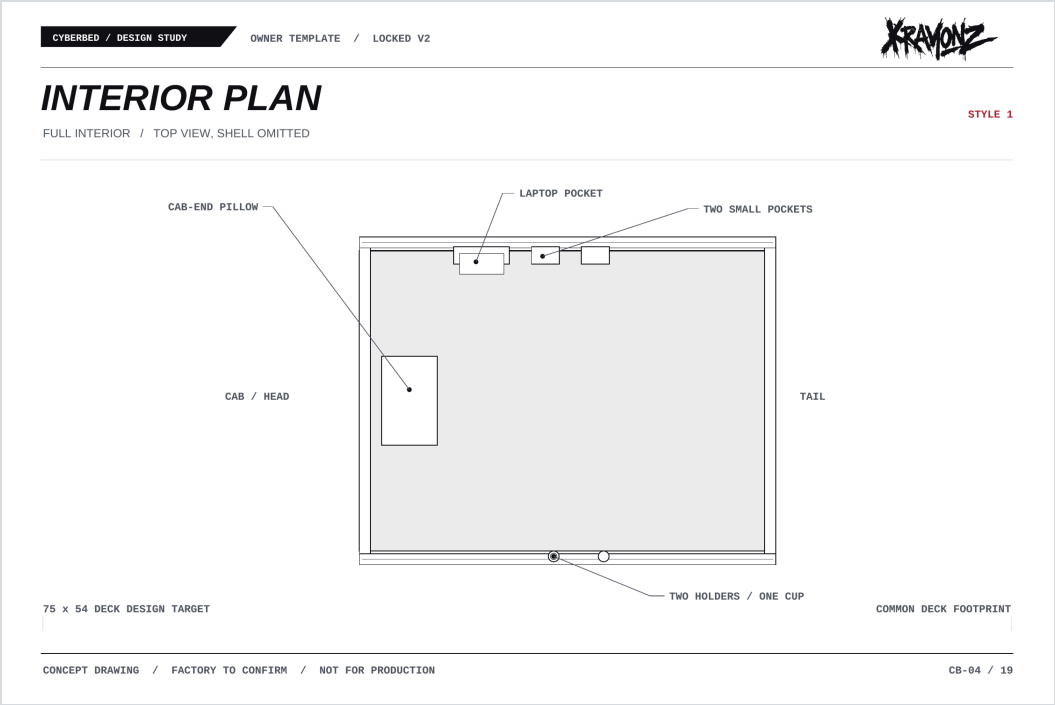

Top view - the full-length deck and the interior layout.

STYLE 1 - FULL INTERIOR

Exploded View + The Eight Pieces

The product separated into its eight flat-pattern pieces, aligned on one axis - assembly order reads top to bottom. These are the same pieces the assembled drawings are built from; the table is the factory cut list.

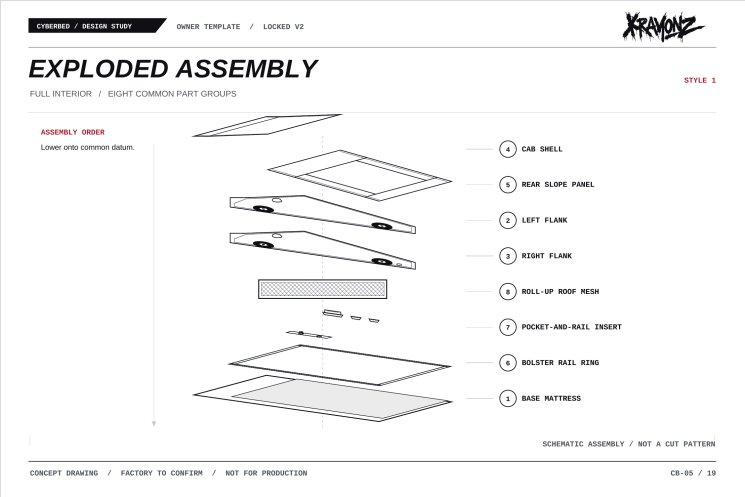

Exploded view - eight pieces, numbered as in the table.

#	PIECE	MATERIAL / METHOD
1	**Base mattress** Sleeping deck - 75 x 54 in Adult Full (Kids size scaled)	0.45 mm PVC, drop-stitch deck
2	**Left flank** Full side profile - pocket welds on its inside face	0.45 mm PVC, heat-welded seams
3	**Right flank** Full side profile - Boston valve low near the tail	0.45 mm PVC, heat-welded seams
4	**Cab shell** Nose slope + the rising roofline to the peak	0.45 mm PVC, heat-welded seams
5	**Rear slope panel** One straight slope, peak to tail	0.45 mm PVC, heat-welded seams
6	**Bolster rail ring** Inflated rail rimming the deck on all sides	0.45 mm PVC, heat-welded seams
7	**Pocket-and-rail insert** Laptop pocket + two small pockets (left wall); two cup holders (right rail - Style 3: on the divider)	Welded pouches; thermoformed recesses
8	**Roll-up roof mesh** Non-inflated mesh panel, attached at the top edge of the roof opening; rolls up with tie straps - the entry and the ventilation	Mesh, non-inflated

All graphics are printed on - lights, lines, and the CYBERBED side-wall print. No wiring, no electronics. Every surface is a flat or single-curve panel, heat-welded - nothing a factory cannot cut and weld. Adult Full overall truck: approx. 92 in L x 40 in H - DESIGN TARGET - FACTORY TO CONFIRM.

STYLE 1 - FULL INTERIOR

Three-Quarter Drawing

The finished inflatable, drawn: the single-peak triangle top, the long slope to the tail, dark wheels with angular hubs, and the bubble side mirror - a rounded triangular paddle on a short stalk - popping out from the cab flank. From this angle the roof hatch is rolled up and tied open, showing the sleeping deck inside the enclosed shell.

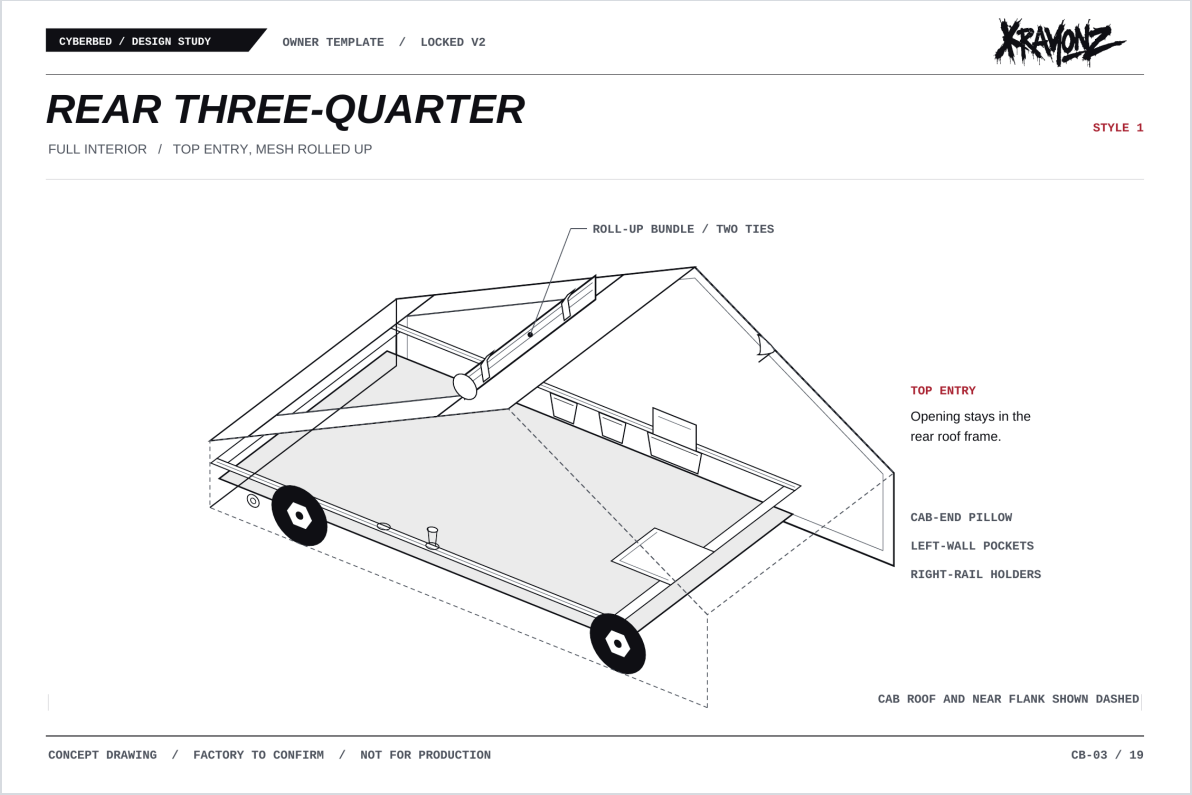

Rear three-quarter - roof hatch rolled up and tied, interior visible.

Line drawing for shape and proportion. Welded seam lines, the Boston valve low on the right flank near the tail, and printed graphics are placed as they will be built.

STYLE 1 - FULL INTERIOR

Inside the Bed - Interior Plan + Detail

The full-length sleeping deck, made up with its pillow at the cab end. On the left wall: the large laptop pocket and two smaller pockets. On the right rail: two molded cup holders, one holding a cup. Every feature is built into the inflatable - welded-on pouches and molded recesses, drawn in, not added on.

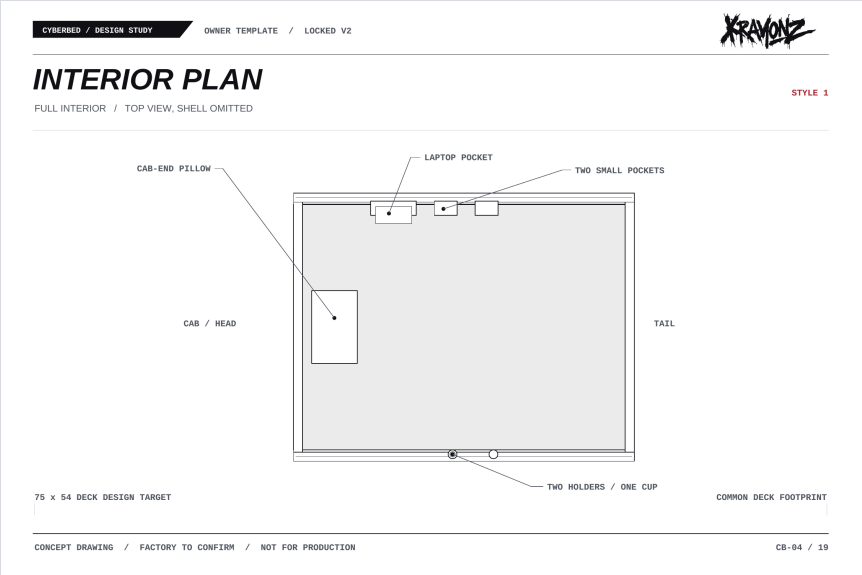

Interior plan - top view: pillow at the cab end, pockets on the left wall, cup holders on the right rail (Style 3: on the divider).

Interior detail - pockets and cup holders, close up

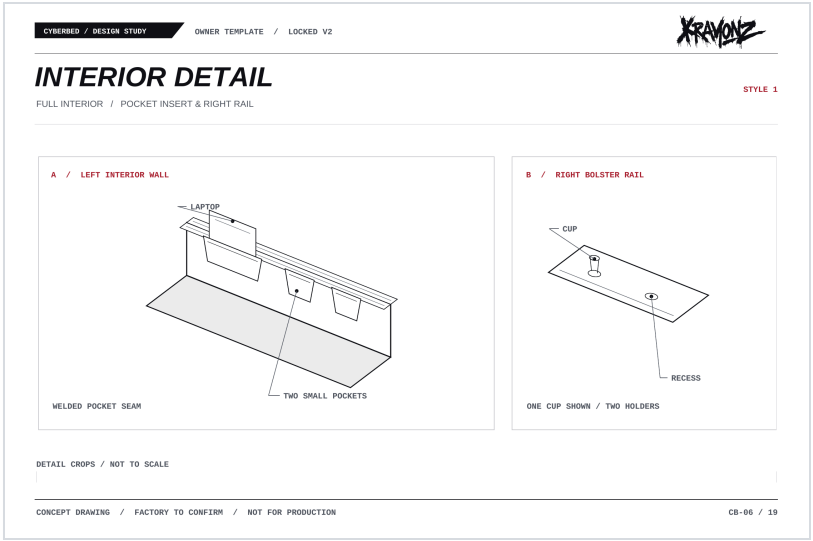

Interior detail - one corner, close up.

STYLE 2 - TRUCK-BED ONLY

Dimensioned Drawing - Side + Top View

Side elevation and top plan of the same shell. Adult design targets: length 92, peak height 40 at 40% of length, deck 75 x 54 - factory to confirm. Width is never dimensioned; the factory sets it to hold the deck.

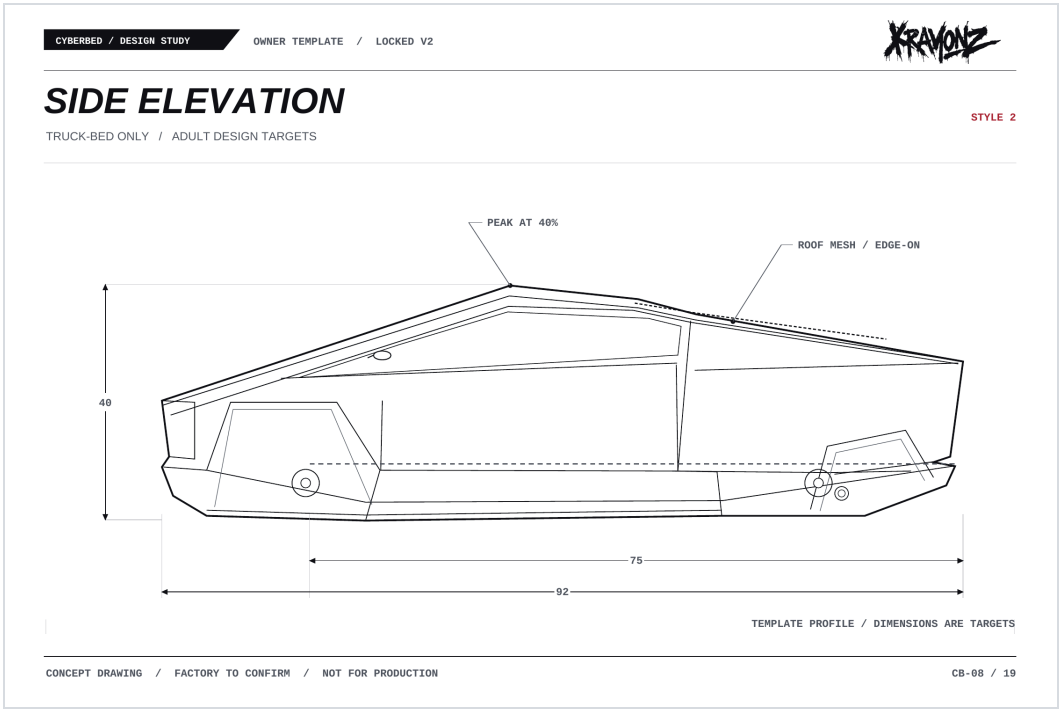

Side elevation - dimensioned. The roof mesh reads edge-on along the rear slope.

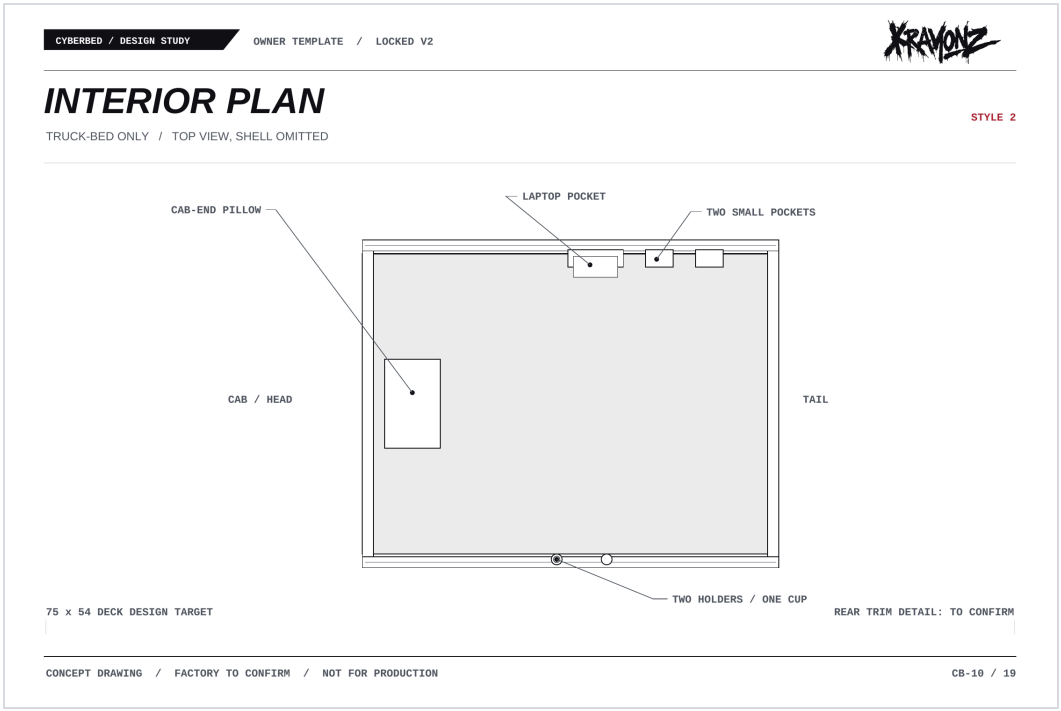

Top view - the full-length deck and the interior layout.

STYLE 2 - TRUCK-BED ONLY

Exploded View + The Eight Pieces

The product separated into its eight flat-pattern pieces, aligned on one axis - assembly order reads top to bottom. These are the same pieces the assembled drawings are built from; the table is the factory cut list.

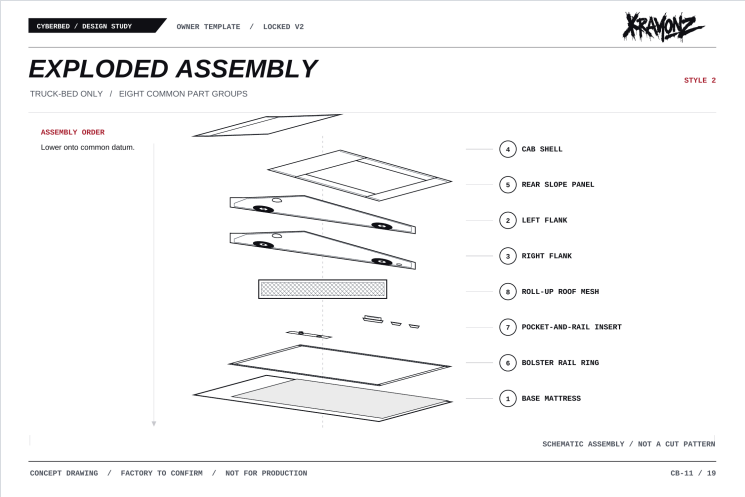

Exploded view - eight pieces, numbered as in the table.

#	PIECE	MATERIAL / METHOD
1	**Base mattress** Sleeping deck - 75 x 54 in Adult Full (Kids size scaled)	0.45 mm PVC, drop-stitch deck
2	**Left flank** Full side profile - pocket welds on its inside face	0.45 mm PVC, heat-welded seams
3	**Right flank** Full side profile - Boston valve low near the tail	0.45 mm PVC, heat-welded seams
4	**Cab shell** Nose slope + the rising roofline to the peak	0.45 mm PVC, heat-welded seams
5	**Rear slope panel** One straight slope, peak to tail	0.45 mm PVC, heat-welded seams
6	**Bolster rail ring** Inflated rail rimming the deck on all sides	0.45 mm PVC, heat-welded seams
7	**Pocket-and-rail insert** Laptop pocket + two small pockets (left wall); two cup holders (right rail - Style 3: on the divider)	Welded pouches; thermoformed recesses
8	**Roll-up roof mesh** Non-inflated mesh panel, attached at the top edge of the roof opening; rolls up with tie straps - the entry and the ventilation	Mesh, non-inflated

All graphics are printed on - lights, lines, and the CYBERBED side-wall print. No wiring, no electronics. Every surface is a flat or single-curve panel, heat-welded - nothing a factory cannot cut and weld. Adult Full overall truck: approx. 92 in L x 40 in H - DESIGN TARGET - FACTORY TO CONFIRM.

STYLE 2 - TRUCK-BED ONLY

Three-Quarter Drawing

The finished inflatable, drawn: the single-peak triangle top, the long slope to the tail, dark wheels with angular hubs, and the bubble side mirror - a rounded triangular paddle on a short stalk - popping out from the cab flank. From this angle the roof hatch is rolled up and tied open, showing the sleeping deck inside the enclosed shell.

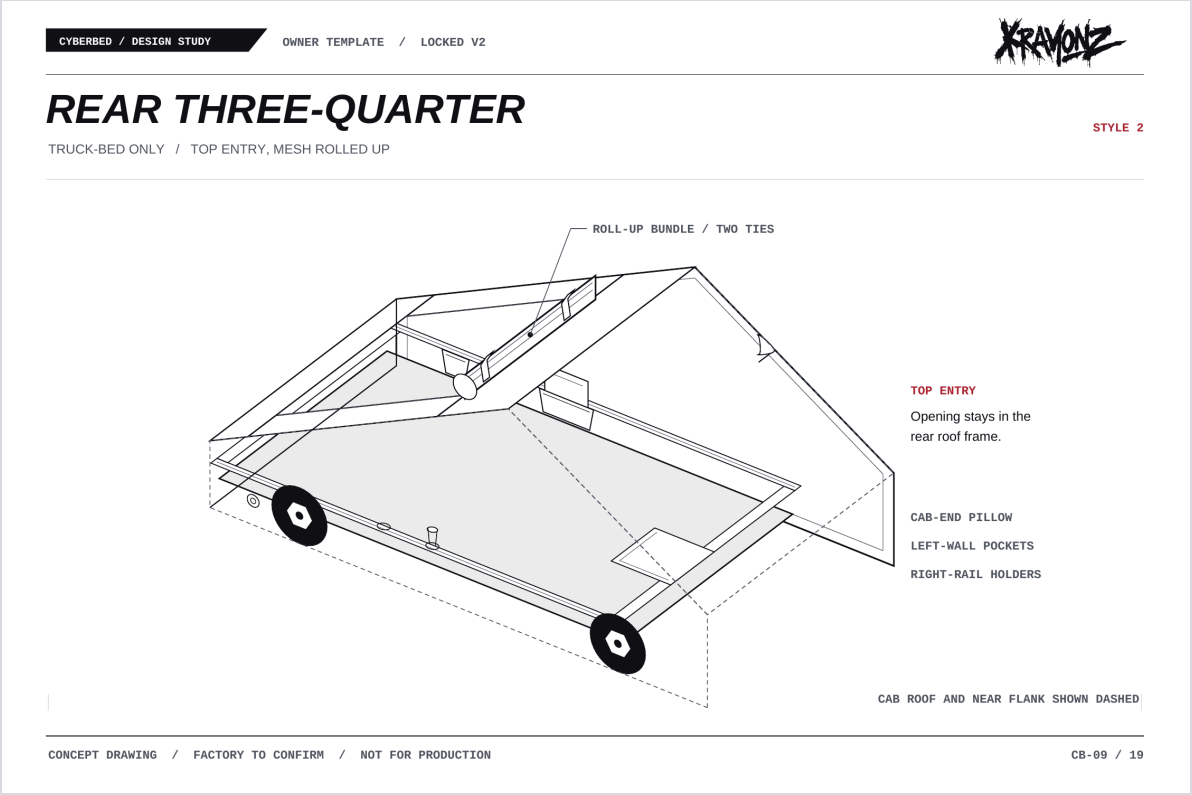

Rear three-quarter - roof hatch rolled up and tied, interior visible.

Line drawing for shape and proportion. Welded seam lines, the Boston valve low on the right flank near the tail, and printed graphics are placed as they will be built.

STYLE 2 - TRUCK-BED ONLY

Inside the Bed - Interior Plan + Detail

The same full-length deck as Style 1, pillow at the cab end, with the interior trim and pockets emphasized in the rear zone. On the left wall: the large laptop pocket and two smaller pockets. On the right rail: two molded cup holders, one holding a cup. Every feature is built into the inflatable, drawn in, not added on.

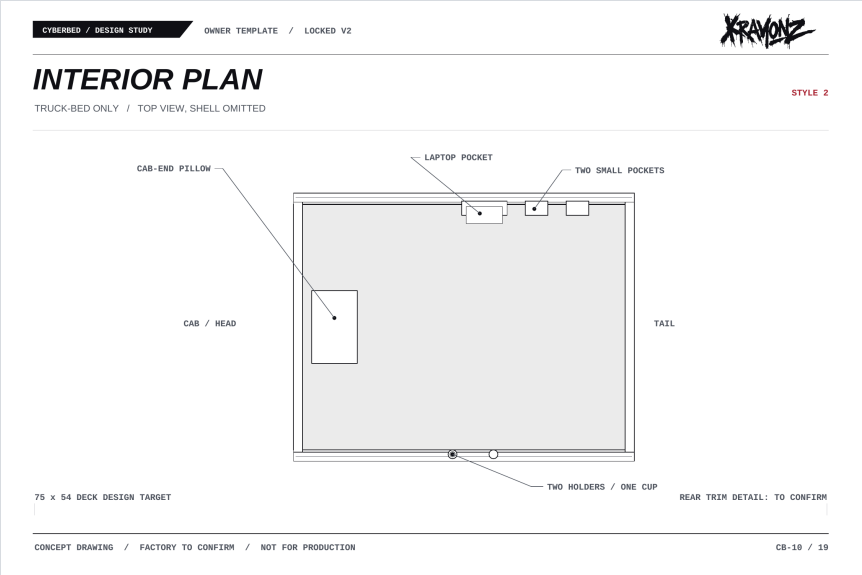

Interior plan - top view: pillow at the cab end, pockets on the left wall, cup holders on the right rail (Style 3: on the divider).

Interior detail - pockets and cup holders, close up

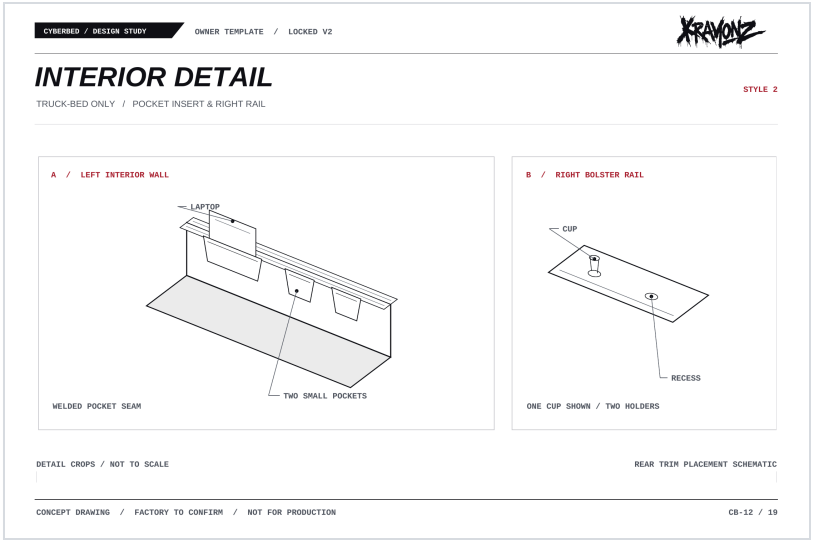

Interior detail - one corner, close up.

STYLE 3 - SPLIT CONVERTIBLE

Dimensioned Drawing - Side + Top View

Side elevation and top plan of the same shell. Adult design targets: length 92, peak height 40 at 40% of length, deck 75 x 54 - factory to confirm. Width is never dimensioned; the factory sets it to hold the deck.

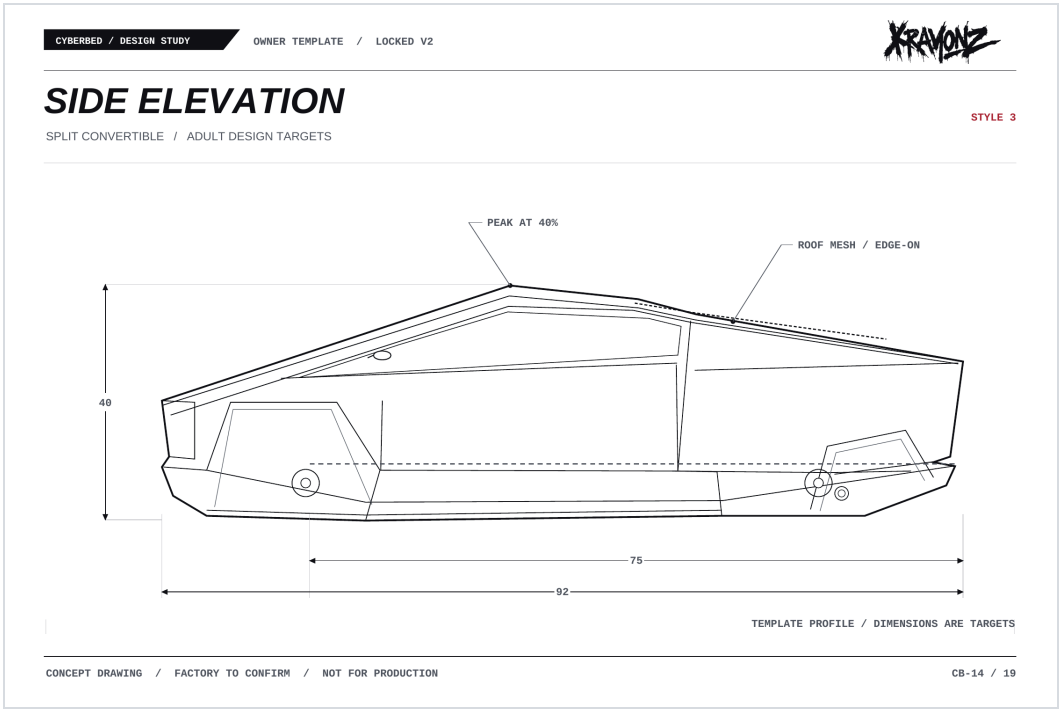

Side elevation - dimensioned. The roof mesh reads edge-on along the rear slope.

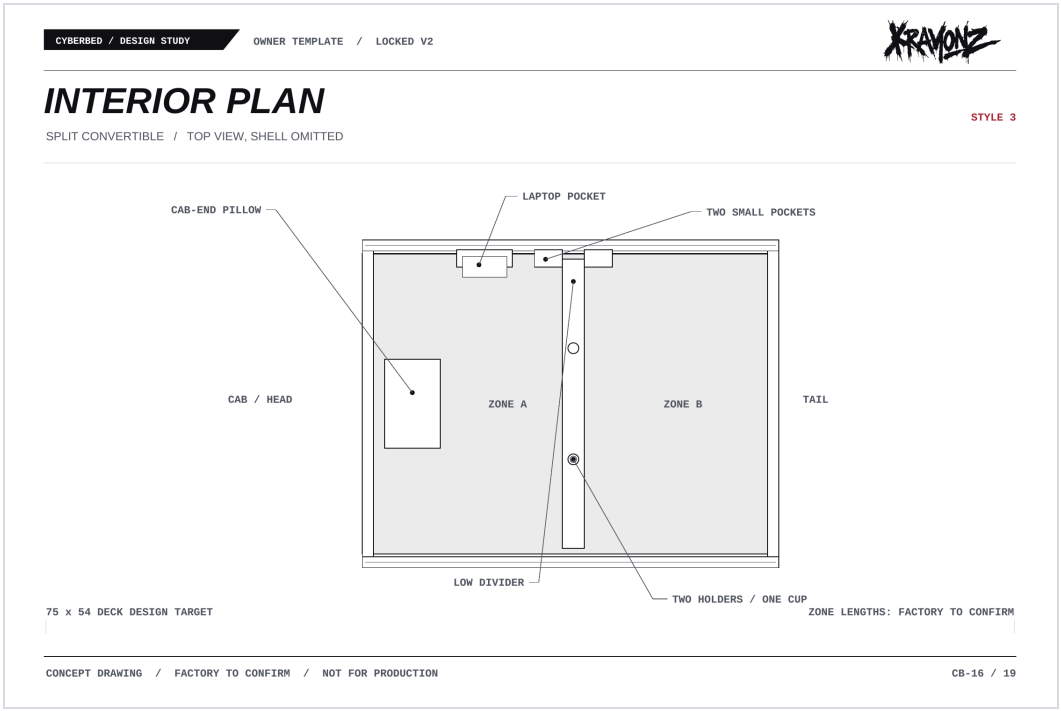

Top view - the full-length deck and the interior layout.

STYLE 3 - SPLIT CONVERTIBLE

Exploded View + The Eight Pieces

The product separated into its eight flat-pattern pieces, aligned on one axis - assembly order reads top to bottom. These are the same pieces the assembled drawings are built from; the table is the factory cut list.

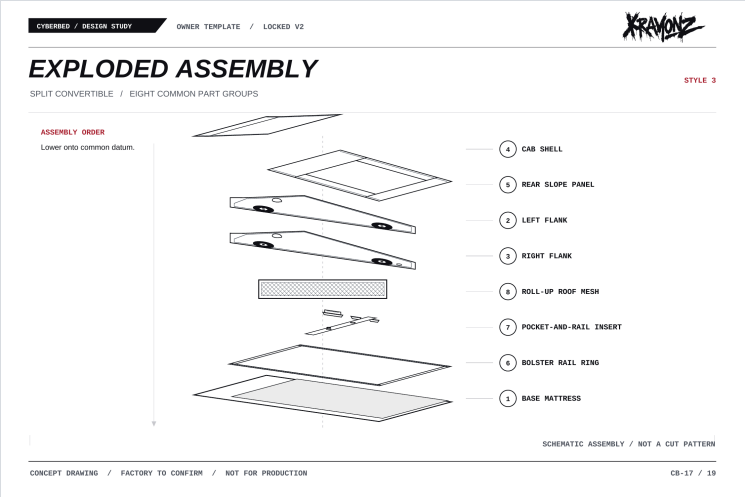

Exploded view - eight pieces, numbered as in the table.

#	PIECE	MATERIAL / METHOD
1	**Base mattress** Sleeping deck - 75 x 54 in Adult Full (Kids size scaled)	0.45 mm PVC, drop-stitch deck
2	**Left flank** Full side profile - pocket welds on its inside face	0.45 mm PVC, heat-welded seams
3	**Right flank** Full side profile - Boston valve low near the tail	0.45 mm PVC, heat-welded seams
4	**Cab shell** Nose slope + the rising roofline to the peak	0.45 mm PVC, heat-welded seams
5	**Rear slope panel** One straight slope, peak to tail	0.45 mm PVC, heat-welded seams
6	**Bolster rail ring** Inflated rail rimming the deck on all sides	0.45 mm PVC, heat-welded seams
7	**Pocket-and-rail insert** Laptop pocket + two small pockets (left wall); two cup holders (right rail - Style 3: on the divider)	Welded pouches; thermoformed recesses
8	**Roll-up roof mesh** Non-inflated mesh panel, attached at the top edge of the roof opening; rolls up with tie straps - the entry and the ventilation	Mesh, non-inflated

All graphics are printed on - lights, lines, and the CYBERBED side-wall print. No wiring, no electronics. Every surface is a flat or single-curve panel, heat-welded - nothing a factory cannot cut and weld. Adult Full overall truck: approx. 92 in L x 40 in H - DESIGN TARGET - FACTORY TO CONFIRM.

STYLE 3 - SPLIT CONVERTIBLE

Three-Quarter Drawing

The finished inflatable, drawn: the single-peak triangle top, the long slope to the tail, dark wheels with angular hubs, and the bubble side mirror - a rounded triangular paddle on a short stalk - popping out from the cab flank. From this angle the roof hatch is rolled up and tied open, showing the sleeping deck inside the enclosed shell.

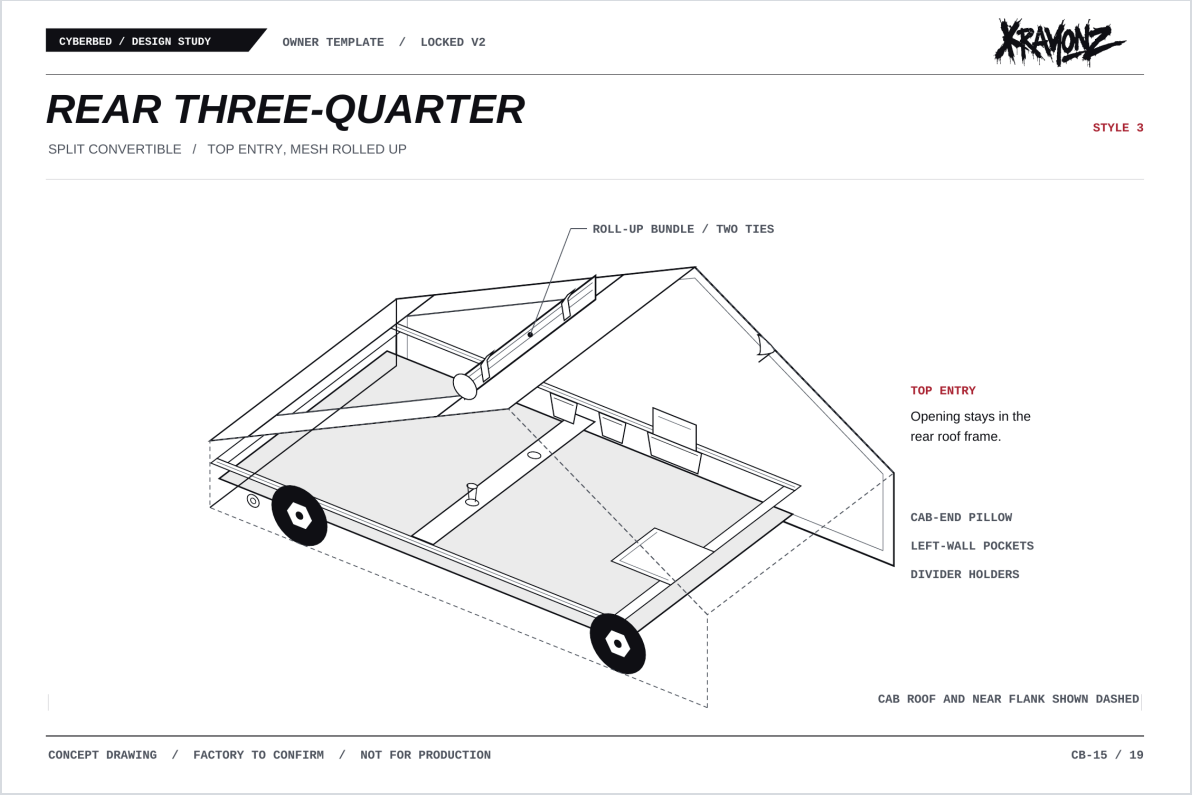

Rear three-quarter - roof hatch rolled up and tied, interior visible.

Line drawing for shape and proportion. Welded seam lines, the Boston valve low on the right flank near the tail, and printed graphics are placed as they will be built.

STYLE 3 - SPLIT CONVERTIBLE

Inside the Bed - Interior Plan + Detail

Both sleeping zones on the one full-length footprint, divided by a low inflated divider - the two molded cup holders sit on the divider, one holding a cup. On the left wall: the large laptop pocket and two smaller pockets. Every feature is built into the inflatable, drawn in, not added on.

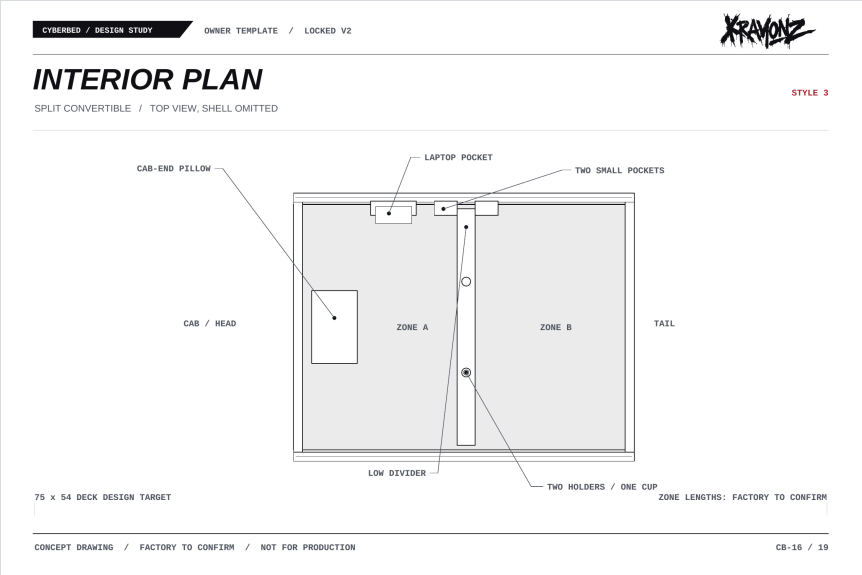

Interior plan - top view: pillow at the cab end, pockets on the left wall, cup holders on the right rail (Style 3: on the divider).

Interior detail - pockets and cup holders, close up

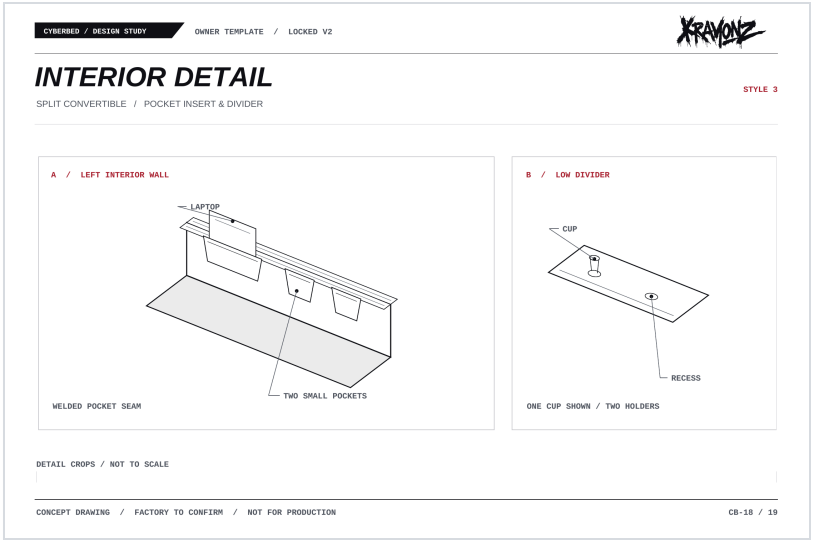

Interior detail - one corner, close up.

SHARED DETAIL - ALL THREE STYLES

The Roll-Up Mesh Hatch - Detail

One hatch serves every style. The mesh panel is piece 8 of the eight - non-inflated, attached along the top edge of the roof opening, and it is both the entry and the ventilation.

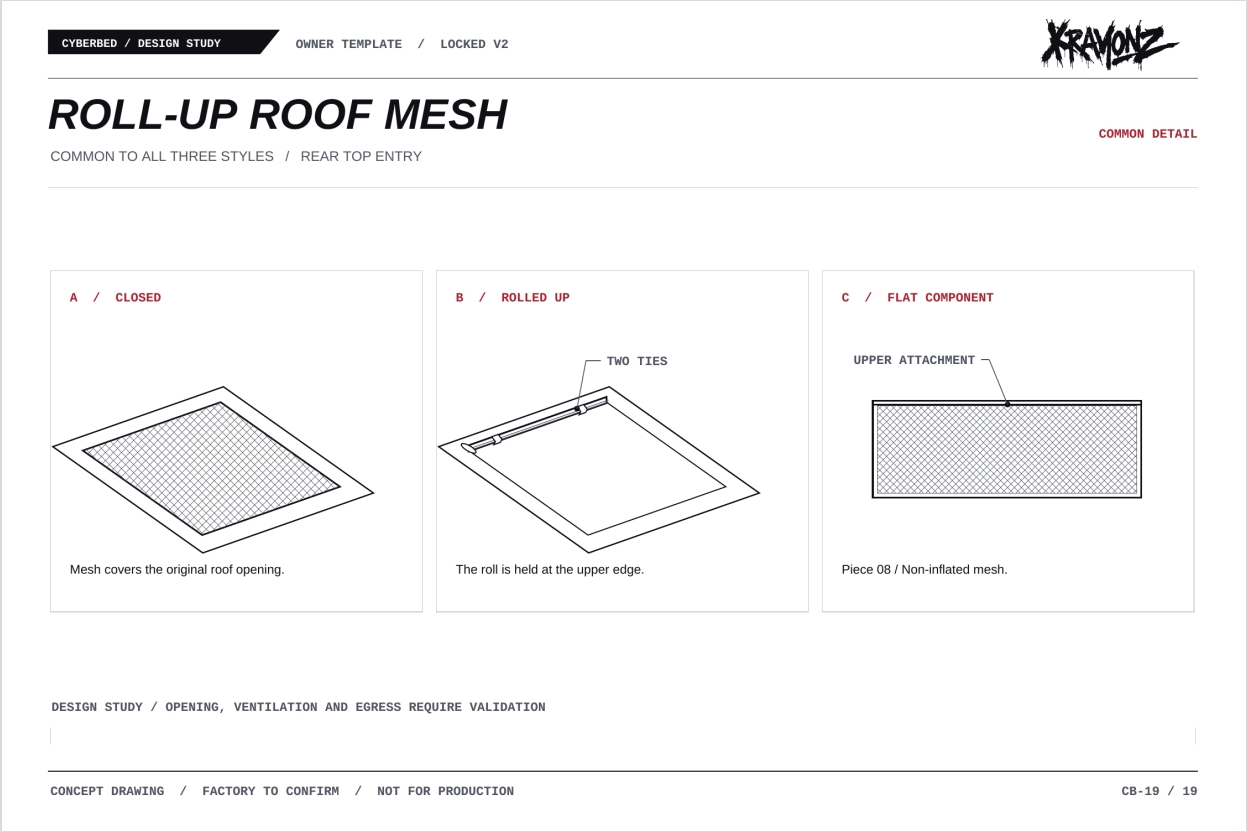

A - closed over the roof opening · B - rolled up, held at the upper edge by two ties · C - flat, as piece 8.

Closed, the mesh covers the roof opening and ventilates the enclosed shell while it is occupied. Rolled up and tied, it is the way in - the sleeper climbs in through the roof and settles with their head at the cab end. Drawn flat, it is a single cut piece in the factory cut list on each style's exploded page.

YOUR PICK - TWO SIZES

Kids, and a Full Size that sleeps two adults

Either size works with any of the three styles.

KIDS

- Sleeps: 1 kid, ages ~3-8
- Mattress: 68 in L x 49 in W x 6 in H
- Overall truck: 83 in L x 36 in H
- Interior: open, per chosen style

ADULT FULL - NEW

- Sleeps: 2 full-size adults
- Mattress: 75 in L x 54 in W x 8 in H - a true full-size bed
- Overall truck (target): approx. 92 in L x 40 in H
- Interior: open, per chosen style

The Kids size is the same truck at honest scale (0.907): overall length and peak height scale down and the deck scales to 68 x 49 in, while the interior features - pockets, cup holders, mesh hatch - stay full-size so they work the same in small hands.

Adult Full dimensions are DESIGN TARGETS - FACTORY TO CONFIRM: the factory confirms final proportions at the quote stage so the truck keeps its exact silhouette at the bigger scale. Overall width is set by the factory to hold the 54 in sleeping width and is confirmed with the same quote.

Pick a size and a style and the factory files are finalized to that combination.

MANUFACTURERS - PICK WHO BUILDS IT

Send any of them this packet for a quote

Carried over from your first packet - contact them directly.

Specialty Plastic Fabricators (CTO Enterprises)

Mokena, Illinois - USA-made custom inflatables; PVC sheet / RF welding, prototyping through production. Best first call for a US prototype.
spfinc.com · 708-479-5501 · info@ctoenterprises.com

Above All Advertising

Custom-shaped inflatables including vehicle replicas; free design proof in 24-48 hrs, 7-14 day production runs.
abovealladvertising.net - Custom Inflatables

Inflatables Company

Fully custom inflatable builds in heavy-duty 0.3mm PVC vinyl; thousands of custom shapes produced worldwide.
inflatablescompany.com - Custom Inflatables

Thomasnet - Custom Inflatables Directory

Vetted US supplier directory (incl. Canwil Textiles, Auburn GA) - pull three or four quotes side by side from one search.
thomasnet.com - Suppliers: Custom Inflatables, USA & Canada

Overseas volume route (Alibaba)

For production runs after the prototype is proven - lowest per-unit cost, longer lead times, order a sample first.
alibaba.com - search "custom inflatable bed manufacturer"

Ask each one the same four things: prototype cost, minimum order, seam method (RF-welded vs stitched), and lead time - then compare apples to apples.

YOUR PICKS - THEN WE FINALIZE

Six quick answers and the factory files get locked

Send your picks back to KRAYONZ and we finalize the build set to your exact style and size.

1	**STYLE**	1 (Full Interior), 2 (Truck-Bed Only), or 3 (Split Convertible)
2	**SIZE**	Kids (83 in overall) or Adult Full (75 x 54 in deck - sleeps two adults)
3	**STEERING WHEEL + DASHBOARD**	Printed accents up front - in as decoration, or out completely?
4	**ROOF HATCH**	Roll-up mesh panel in the roof, as drawn - keep it exactly, or talk through a variant?
5	**COLORS**	Body color and graphic colors
6	**TIMELINE**	When do you want the first one in hand?

The drawings in this packet become the build set your manufacturer quotes and builds from. Questions anytime - KRAYONZ, Hartford. krayonz.ink

- KRAYONZ

From the sketchbook — Noah's original drawings

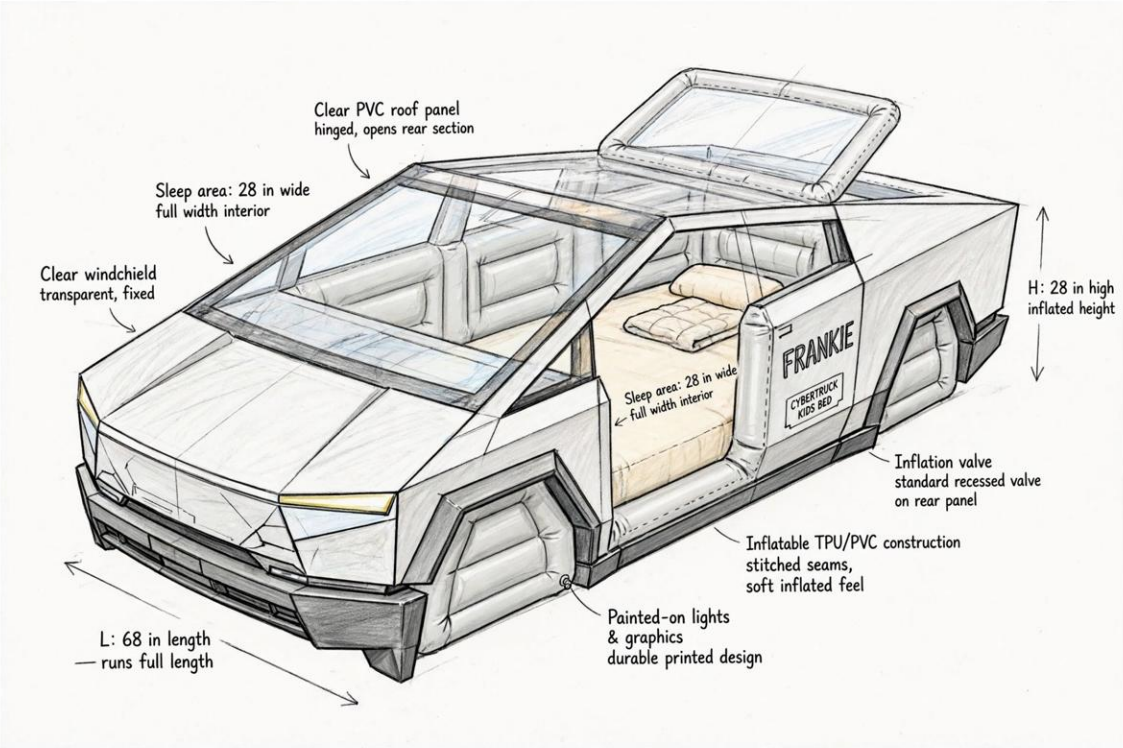

Noah's template 1 — three-quarter view, hatch open. The drawing the design fo

From the sketchbook — Noah's original drawings

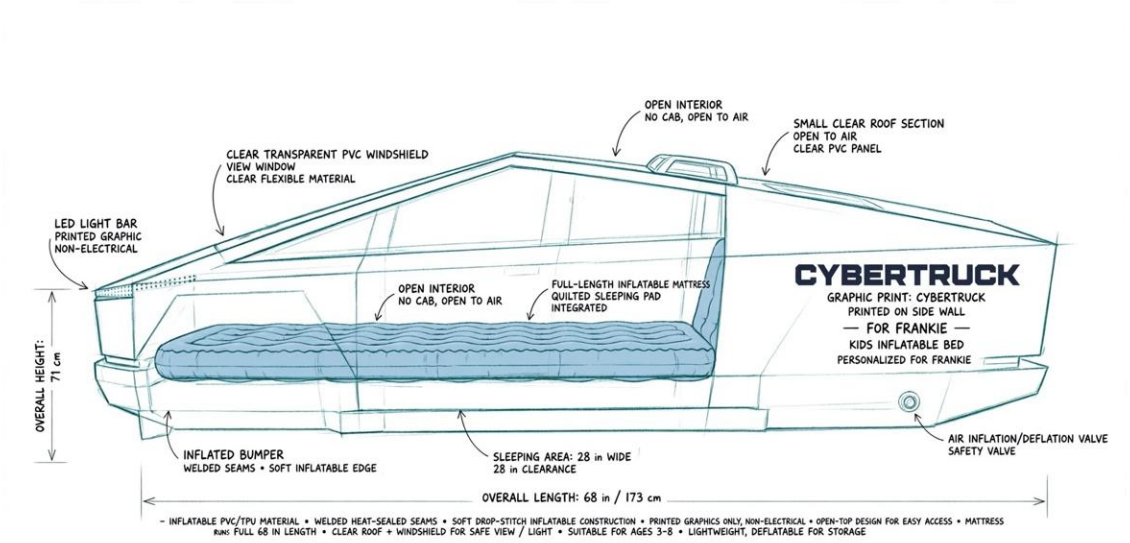

Noah's template 2 — side view. The drawing the design follows.

Extra artwork — eight directions to think about

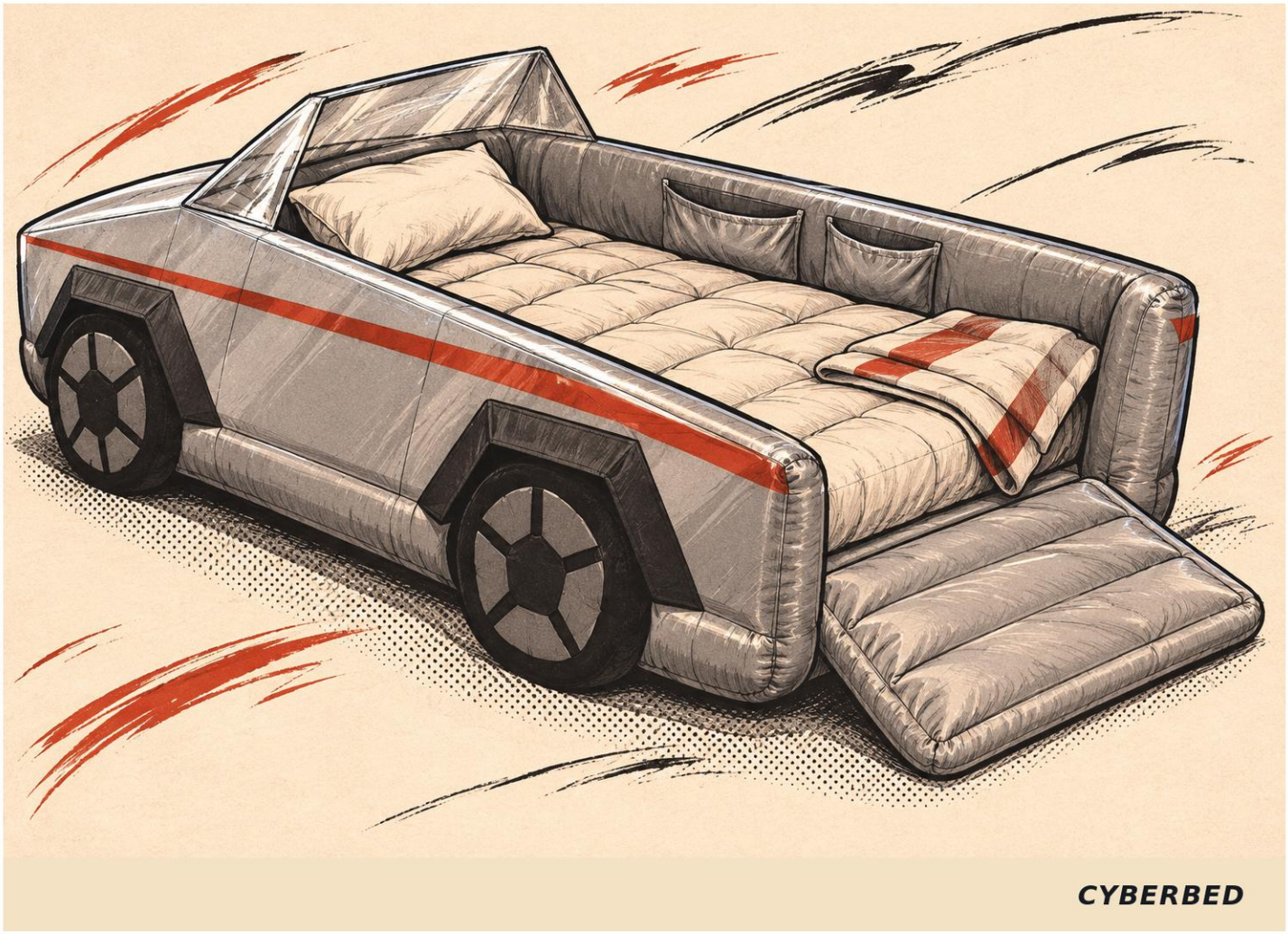

SPARK — Street Wedge. Open-top, sharp wedge profile, rear step to climb in.

Extra artwork — eight directions to think about

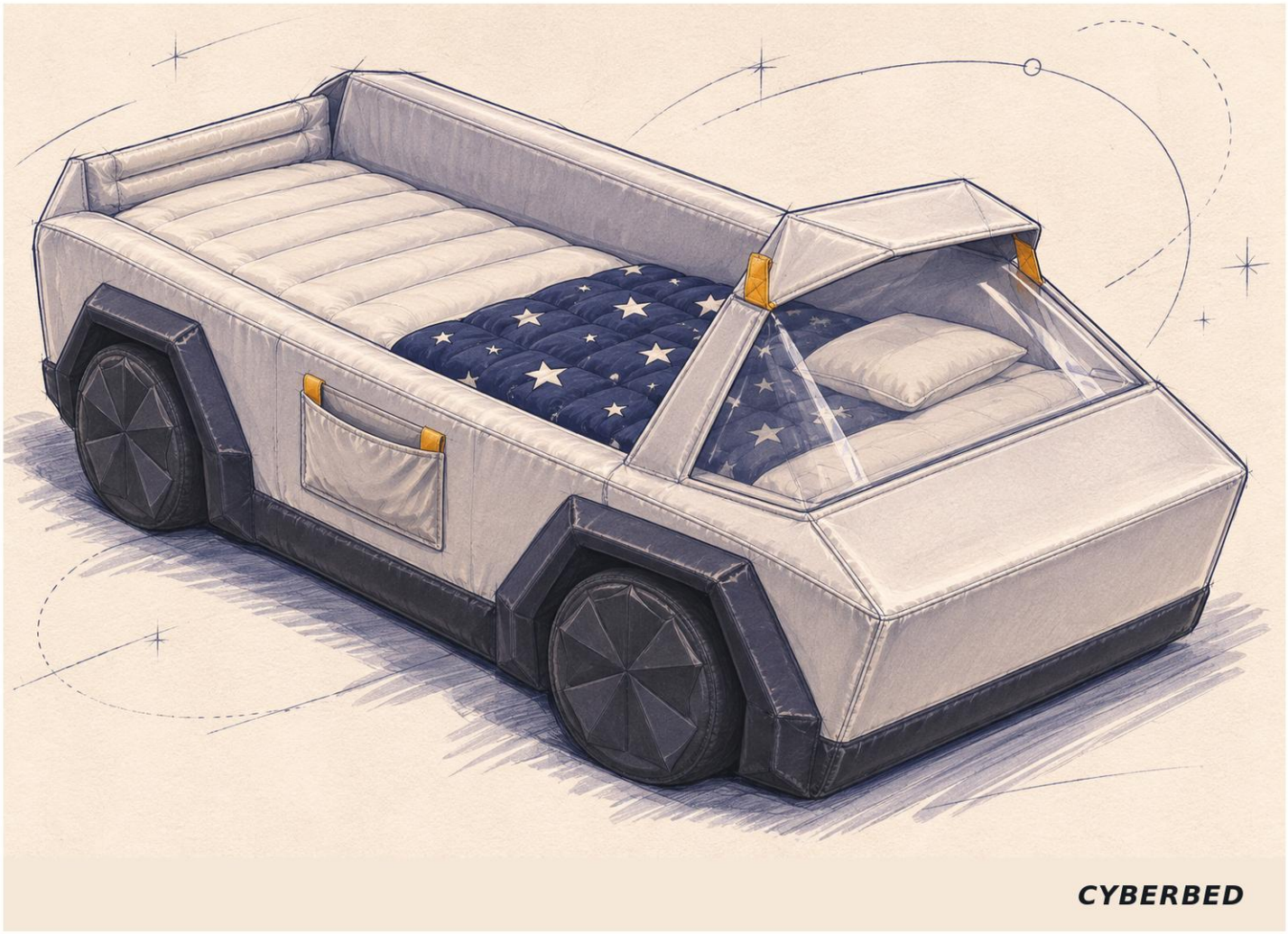

SPARK — Star Camp. Calm night mood, star bedding, side pocket for books.

Extra artwork — eight directions to think about

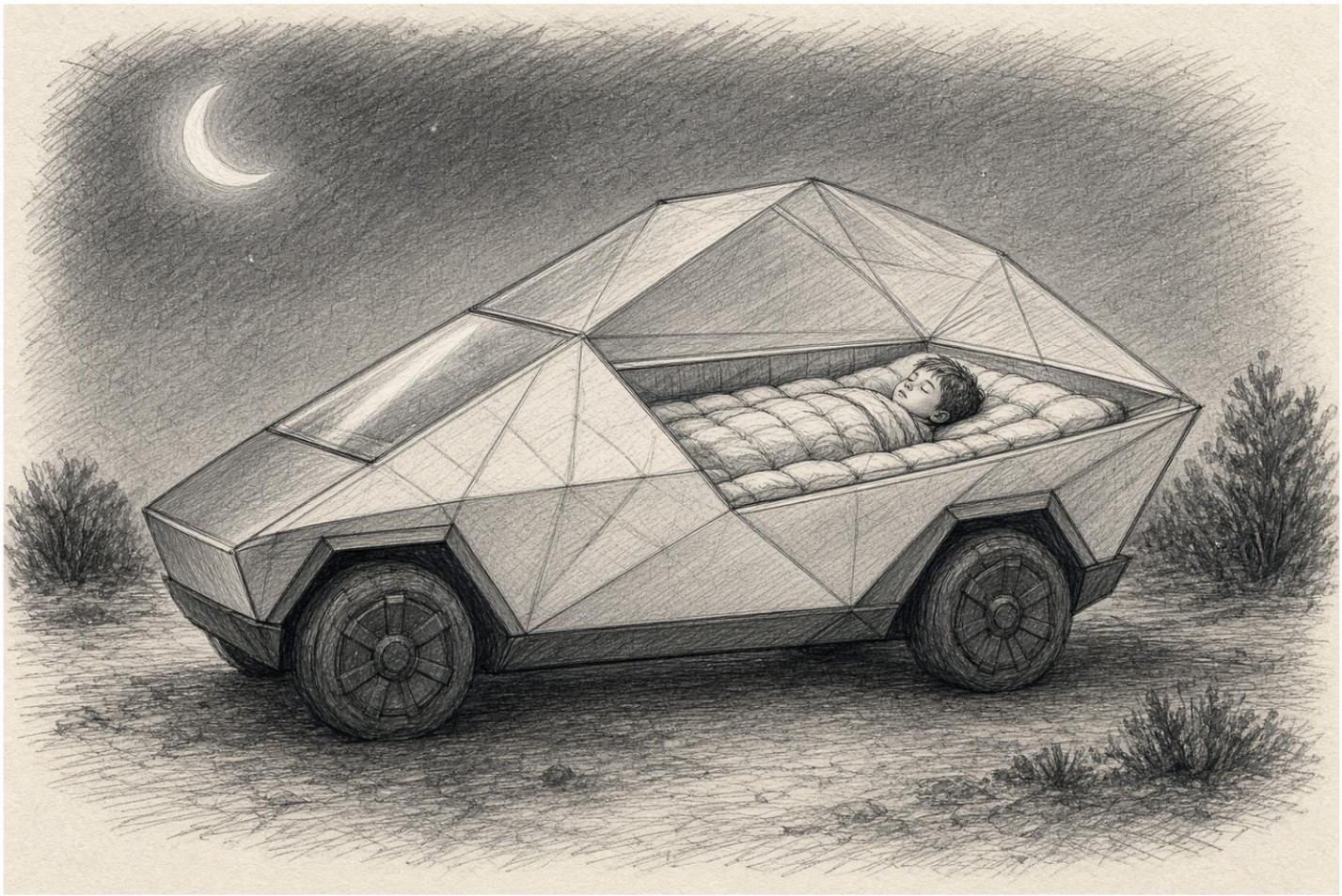

SHOGUN — Stargazer. Clear canopy over the peak; sleep under the moon.

Extra artwork — eight directions to think about

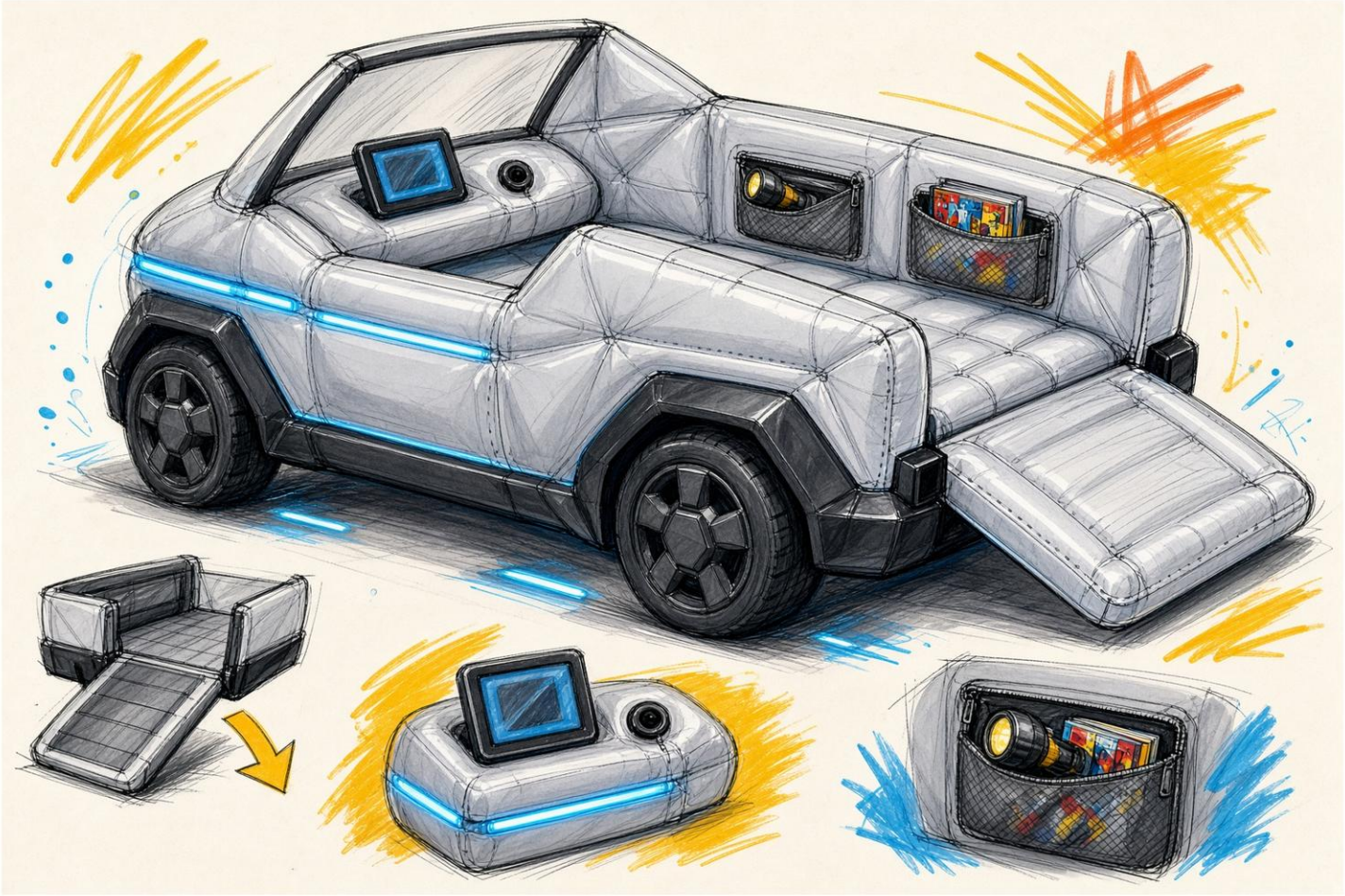

SHOGUN — Base Camp. Tailgate ramp, zip cubbies, dash with tablet shelf.

Extra artwork — eight directions to think about

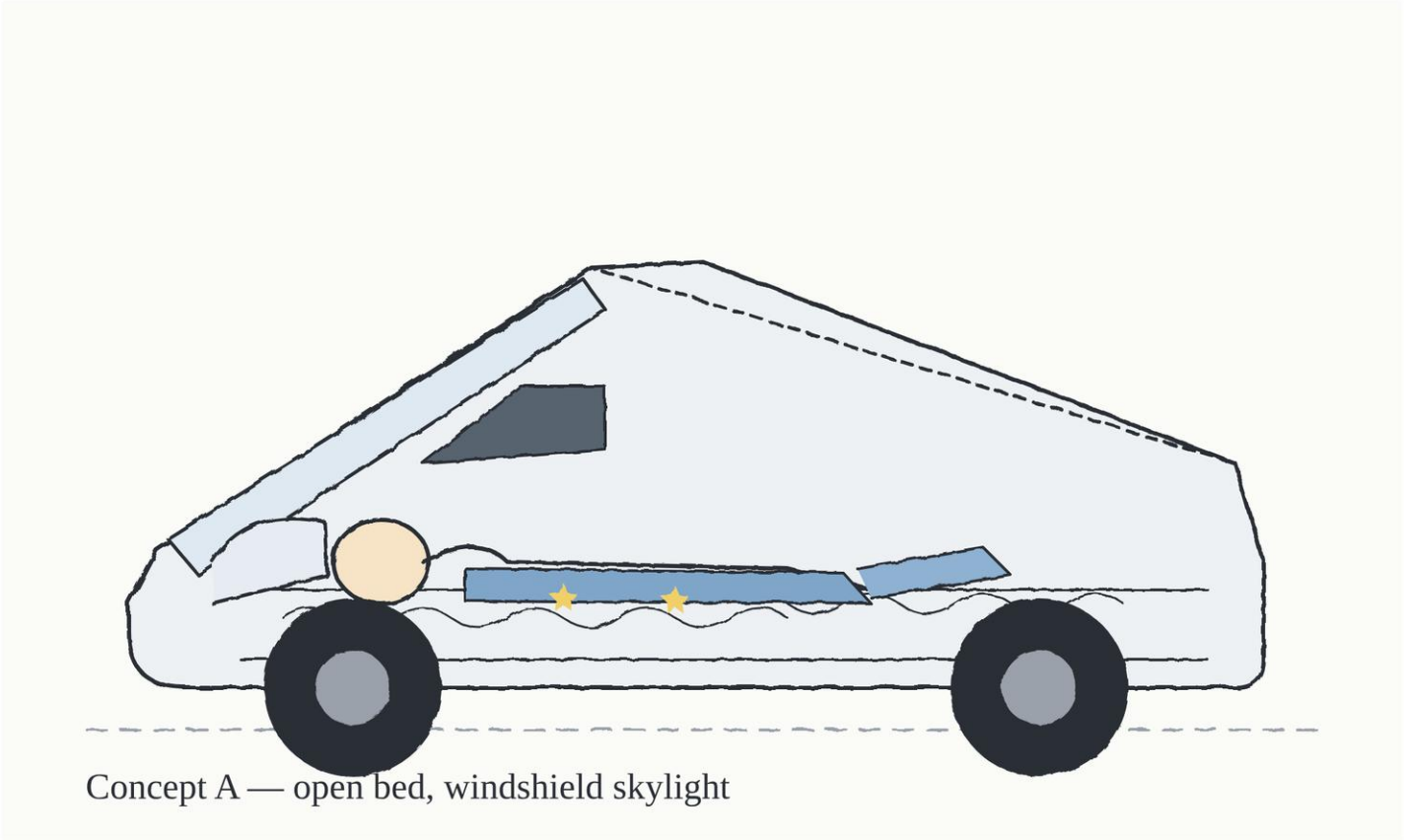

Concept A — open bed, windshield skylight

KURO — Open bed, windshield skylight. The windshield lifts into a skylight.

Extra artwork — eight directions to think about

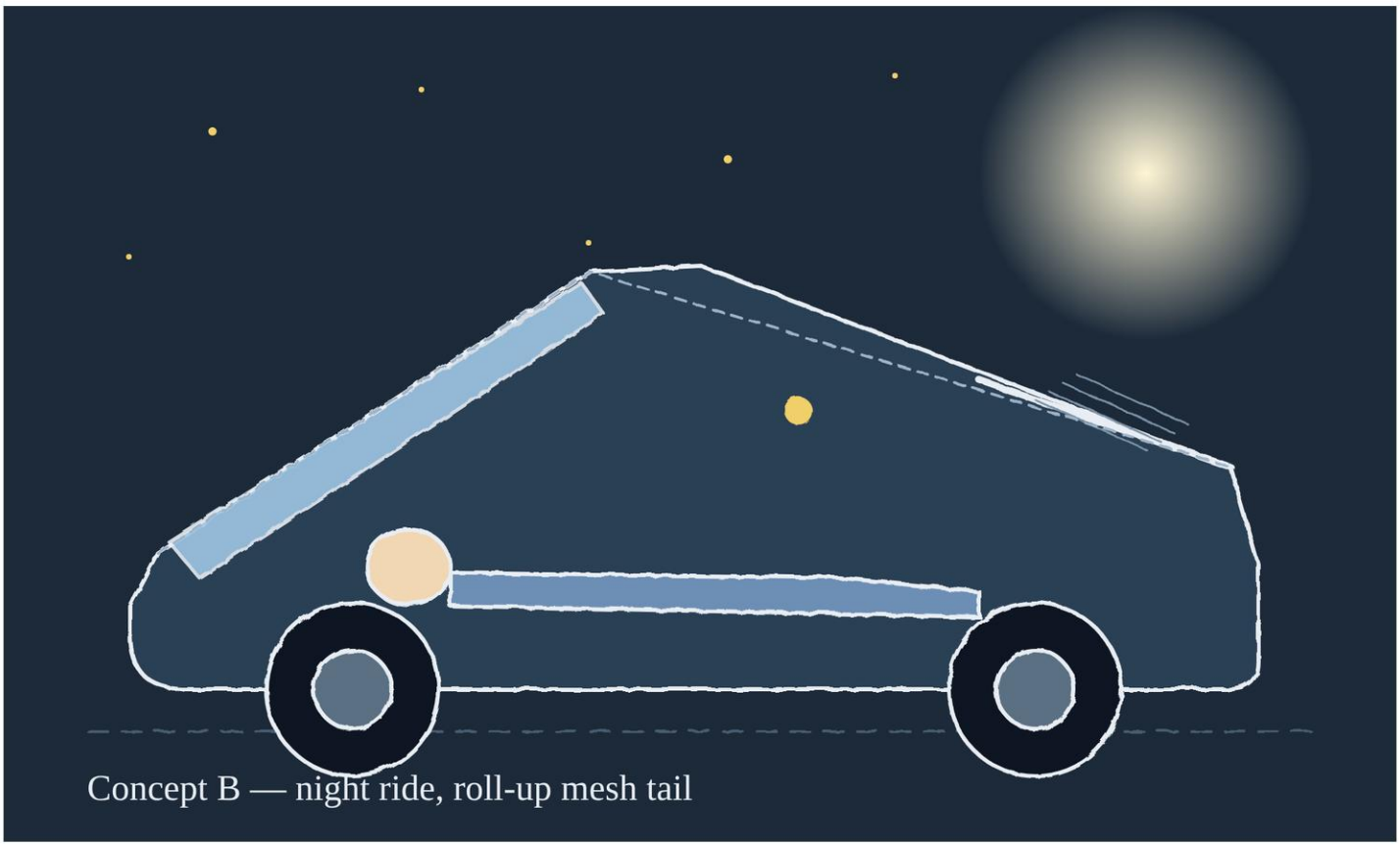

KURO — Night ride, roll-up mesh tail. The mesh tail rolled up, night run.

Extra artwork — eight directions to think about



REPLAY — The Fort. Cover half-raised as a canopy; read by lantern light.

Extra artwork — eight directions to think about



REPLAY — The Racer. Tailgate ramp, pop-out steering wheel; the cockpit.